Heating line

BT - GI

Medium and heavy oil burners

- Safety
- Quality
- Reability
- Design

baltur

TECNOLOGIE PER IL CLIMA

BT - GI

Medium and heavy oil burners

Certificate of quality

In 1994, we were awarded the **UNI EN ISO 9001** Certificate of Quality, one of the first firms to do so in the field.
What this means is that every stage of the Baltur production cycle, from **design**, to **production**, through to **after-sales service**, meets rigorous European standards.

The award amounts to recognition of a continuing desire on our part to improve our range of products and services and offer our customers a total quality guarantee.
For several years now, our policy has been directed to the protection of the environment, a philosophy quite ahead of its time; the outstanding results we have obtained, in connection with the reliability of our products and the extremely high fuel performance levels reached, are the fruits of our commitment to innovation in the Research & Development sector. This desire for innovation has taken form in **Baltur Research Centre**, where a team of highly skilled technicians, experts in fuel technology, carry out rigorous tests and experiments on burner prototypes and thermal units with capacity ranging from 16 to 46000 kW.

BT 9 N

BT 15 N
BT 22 N
BT 35 N
BT 60 N

High technological content

The construction of Baltur burners is based on criteria aimed to creating heating units which are extremely reliable and which offer easy access to every single component, an important factor when comes repairing, cleaning, checking or servicing the machine.
The special pressurisation features, the compact size of the burners in proportion to their heating capacity, the very low electrical energy consumption - these features complete the technical and functional checklist of a product with a high technical content.

Main characteristics

- **Monoblock burner** casing in cast aluminium.
- **Fan** having a specially designed structure with strong pressurisation, to ensure safe

Symbol used

BT...N
One stage (On-Off) heavy oil burners.

BT...SPN
Heavy oil burners up to 5°E at 50°C.
Two stage oil pressure modulation (starting with reduced flame).
One nozzle only.

BT...SPN EFD
Special medium and heavy oil with low sulphur contents burners.
Two stage oil pressure modulation (starting with reduced flame).
One nozzle only.

BT...DSN 4T
Two stage heavy oil burners up to 5 °E at 50 °C.

BT...DSN 4T EFD
Two stage special medium and heavy oil with low sulphur contents burners.

BT...DSNM-D
Two stage heavy oil burners up to 20-50 °E at 50 °C. Return nozzle and nozzle's closing by electromagnet controlled bars.

BT...DSPN
Progressive two stage/modulating heavy oil burners up to 5°E at 50°C.

BT 17 SPN • EFD
BT 35 SPN • EFD

BT 40 DSN 4T • EFD
BT 50 DSN 4T • EFD
BT 75 DSN 4T • EFD
BT 100 DSN 4T • EFD
BT 120 DSN 4T • EFD
BT 180 DSN 4T • EFD
BT 250 DSN 4T • EFD
BT 300 DSN 4T • EFD
BT 350 DSN 4T • EFD

operation even when the burner is fitted on semi-pressurised or pressurised boilers.

• **Sliding coupling flange** on combustion head which allows installer to pin-point the exact position of the combustion head in relation to the boiler furnace and thereby connect them with precision.

• **Combustion head**, constructed to produce the best burner combustion rates at every point in the operating range.

• **Electronic equipment** controlling the entire operating cycle and safety functions.

• **Wide range** of models and capacities.

• **Easy to install and service.**

• **The burners are supplied ready for coupling purposes**.

Operation

Baltur burners are constructed in single-stage, two-stage, progressive two-stage models and progressive two-stage model with modulation kit (the last model carries out the modulating operation).

• **Single-stage**: the burner is provided with only the on/off functions.

• **Two - stage**: the burner operates an off function, a low flame function and a maximum thermal power function. From this last position, the burner can automatically (by control of the specific thermostat or pressure switch) switch back to low flame operation.

BT 75 DSNM-D
BT 100 DSNM-D
BT 120 DSNM-D
BT 180 DSNM-D
BT 250 DSNM-D
BT 300 DSNM-D
BT 350 DSNM-D

• **Progressive two-stage (DSPN)**
Progressive two-stage burners are able to operate at two different heating power levels, passing from one to the other by operation of a special sensor (either thermostat or pressure switch) over a defined period of time: this is

Burner model with hinge (available to order).

Return nozzle and nozzle's closing by electromagnet controlled bars.

BT...DSPN-D
Progressive two stage/modulating heavy oil burners up to 20-50 °E at 50 °C. Return nozzle and nozzle's closing by electromagnet controlled bars.

BT...DSPN EFD
Progressive two stage/modulating special medium and heavy oil with low sulphur contents burners. Return nozzle and nozzle's closing by electromagnet controlled bars.

The letters indicate the model; the capacity of the burner is indicated in the empty spaces.

BT - GI

Medium and heavy oil burners

the period of time required by the servomotor controlling the thermal power to move up from the minimum value to the maximum and vice-versa.
The air/fuel ratio can be adjusted over the entire operating range (minimum-maximum) with extreme precision, depending on the specific needs of the boiler.
• **Modulating** operation: modulating burners are used whenever the thermal power has to be varied continuously in order to adapt itself to the specific needs of the boiler which are also subject to fluctuations.
This type of operation is obtained by equipping the models in the DSPN - series (progressive two-stage) with an automatic thermal power regulator (RWF40) which, with the use of a sensor (either temperature or pressure)

Modulating effect obtained with electric servomotor which allows the correct air/fuel ratio to be maintained at all times, throughout the modulation range.

Industrial burner production line.

BT 75 DSPN • EFD
BT 100 DSPN • EFD
BT 120 DSPN • EFD
BT 180 DSPN • EFD
BT 250 DSPN • EFD
BT 300 DSPN • EFD
BT 350 DSPN • EFD

BT 75 DSPN-D
BT 100 DSPN-D
BT 120 DSPN-D
BT 180 DSPN-D
BT 250 DSPN-D
BT 300 DSPN-D
BT 350 DSPN-D

controls the regulation servomotor, either by increasing or decreasing the thermal power supplied.
The RWF40 regulator is a PID-typemodel (proportional, integral, differential). Parameters can be adjusted by effecting the data settings on the regulator.
Naturally, the thermal power level can only be varied within the "minimum" and "maximum" limits applying to the burner.

GI 350 DSPN • EFD
GI 420 DSPN • EFD
GI 510 DSPN • EFD

GI 350 DSPN-D
GI 420 DSPN-D
GI 510 DSPN-D

Industrial burner series

GI Series - Large systems
The industrial burners in the GI series have been designed specifically for industrial use.
They are constructed in a monoblock version (and are therefore more compact than conventional industrial burners, with the same capacity) with capacity ranging from 1581 to 10500 kW
TS and PYR series
In addition to the GI burners, the industrial series also includes models with larger capacities: the TS series with separate fan and the PYR series with separate fan and adjustable flame.
Information on these models can be found in the relevant brochure.

GI 1000 DSPN • EFD

GI 1000 DSPN-D

Symbols used

GI...DSPN
Progressive two stage/modulating heavy oil burners up to 5 °E at 50 °C. Return nozzle and nozzle's closing by electromagnet controlled bars.

GI...DSPN-D
Progressive two stage/modulating heavy oil burners up to 20-50 °E at 50 °C. Return nozzle and nozzle's closing by electromagnet controlled bars.

GI...DSPN EFD
Progressive two stage/modulating special medium and heavy oil with low sulphur contents burners. Return nozzle and nozzle's closing by electromagnet controlled bars.

The letters indicate the model; the capacity of the burner is indicated in the empty spaces.

BT - GI

Medium and heavy oil burners

Operating ranges

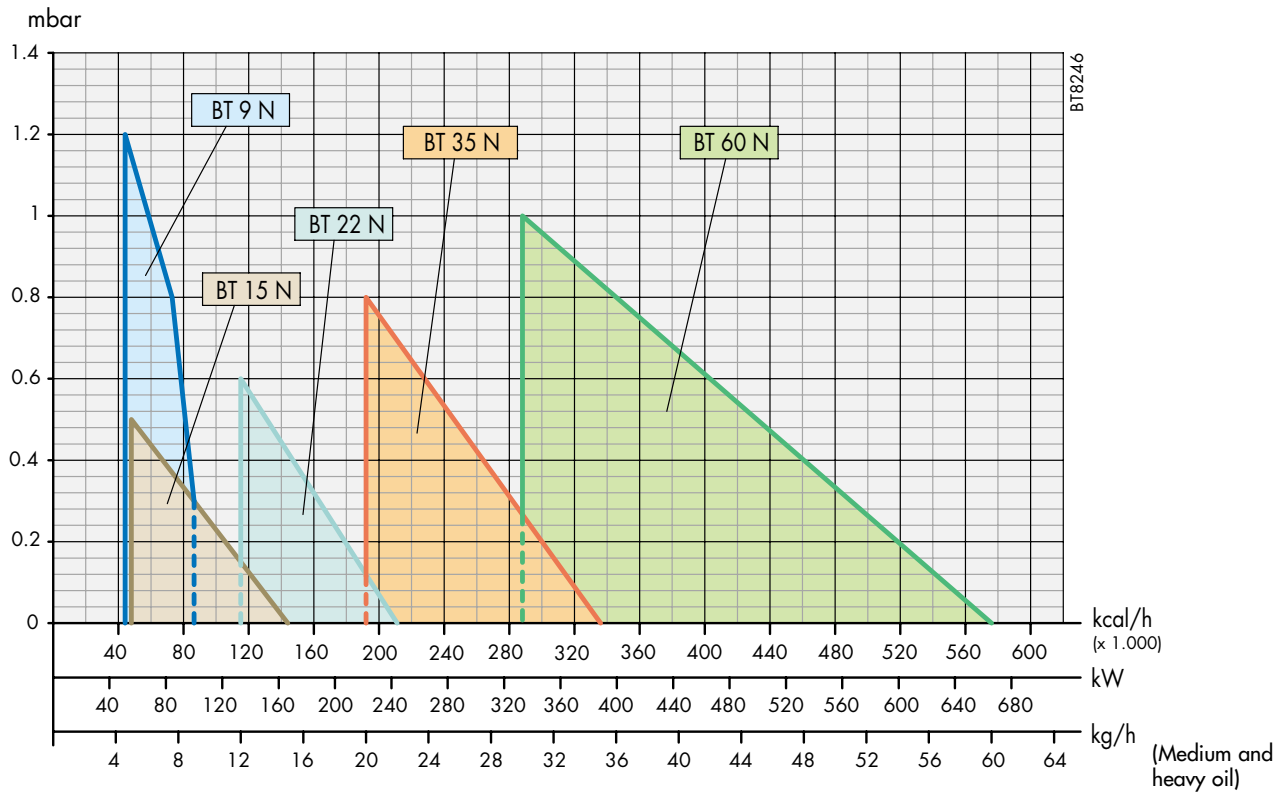

Warning

The diagrams are intended as mere guidelines and are based on test boilers complying with current regulations.
In reality, variations may occur, due to the following factors:
a) the ability of the burner to overcome the excess pressure generated upon lighting (not strictly linked to that applying during normal operation) which tends to vary from one boiler to another;
b) high thermal load in furnace (ratio between thermal power of furnace and relevant volume - kcal/h/m^3) which may prevent the burner fan from exploiting the entire operating range.

Operating ranges

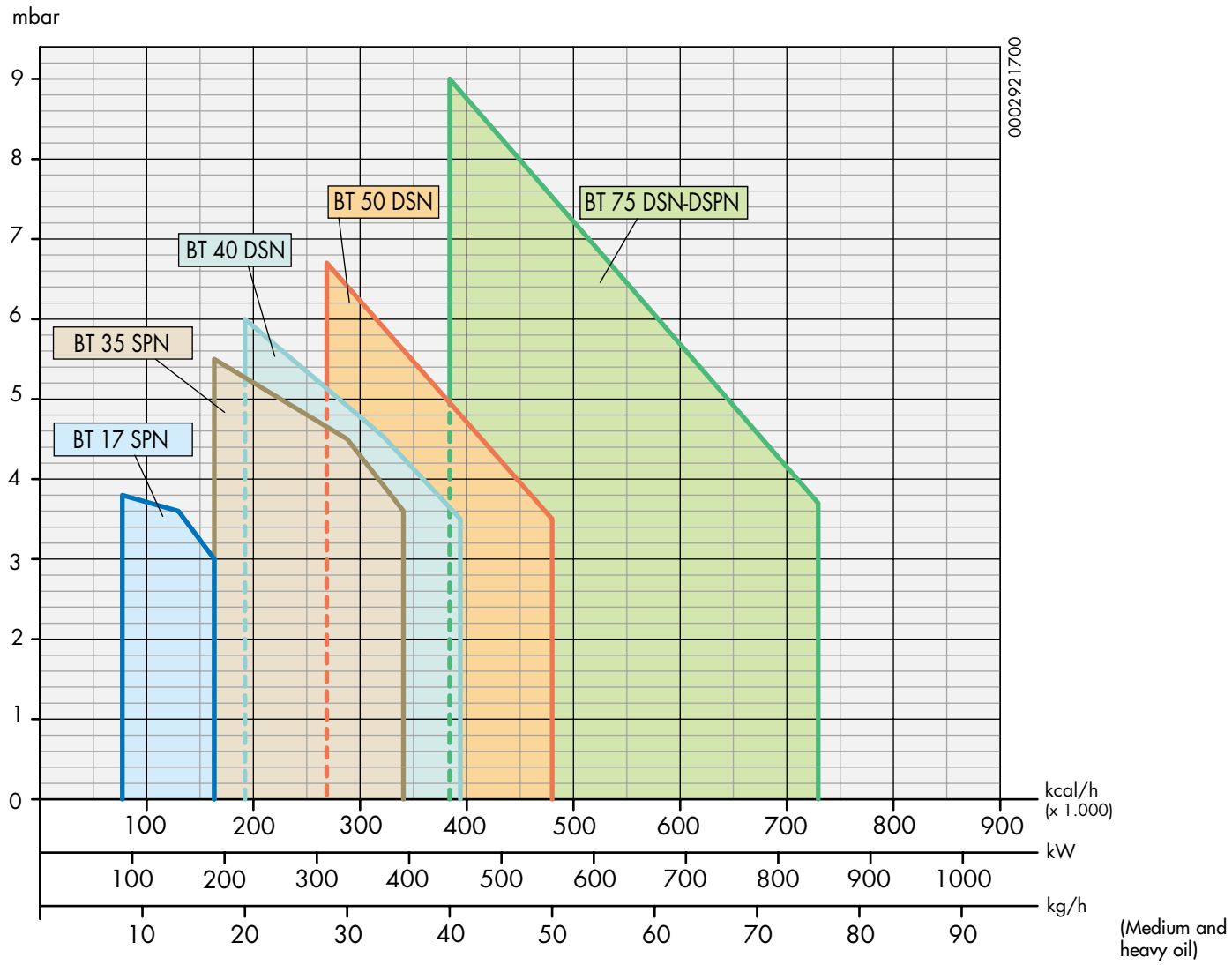

BT - GI

Medium and heavy oil burners

Operating ranges

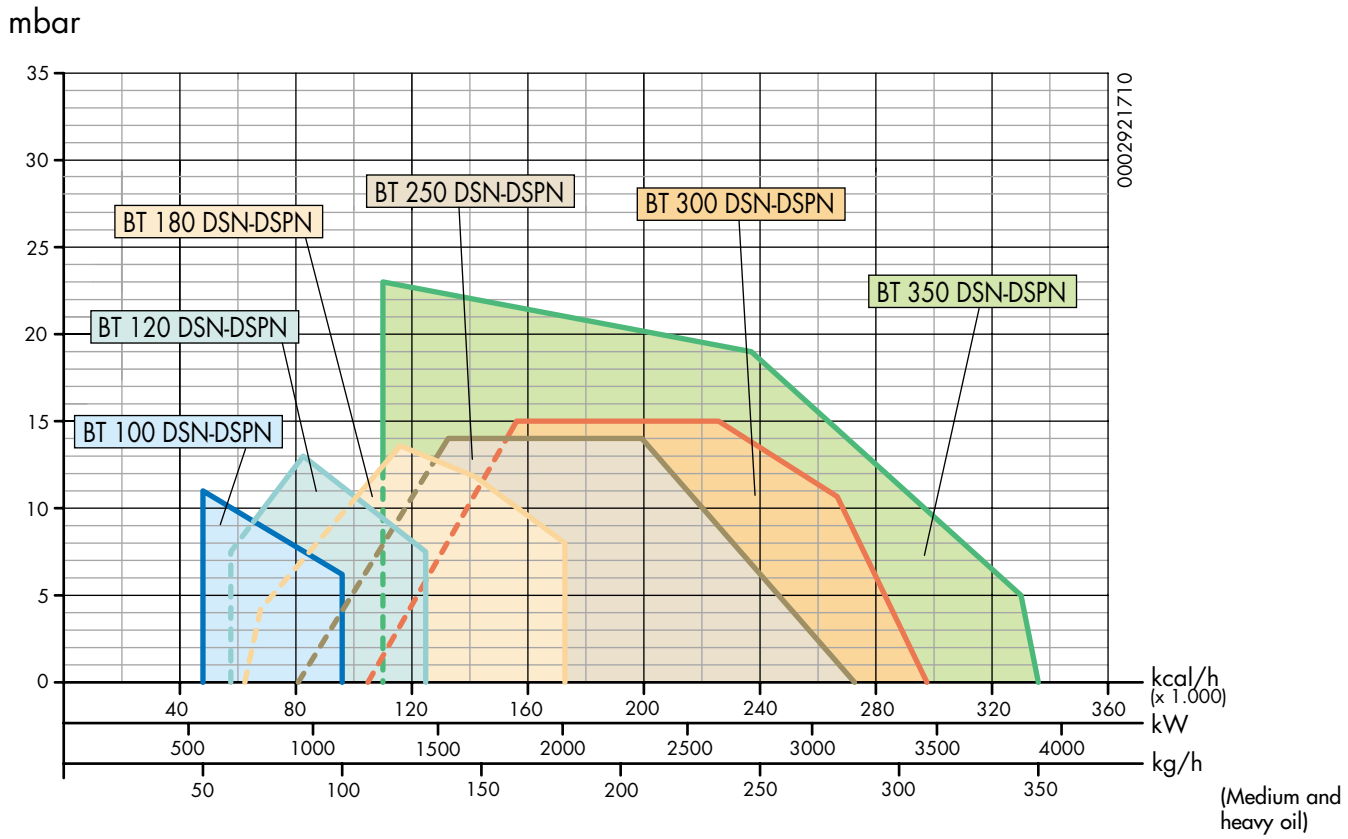

Warning

The diagrams are intended as mere guidelines and are based on test boilers complying with current regulations.
In reality, variations may occur, due to the following factors:
a) the ability of the burner to overcome the excess pressure generated upon lighting (not strictly linked to that applying during normal operation) which tends to vary from one boiler to another;
b) high thermal load in furnace (ratio between thermal power of furnace and relevant volume - kcal/h/m^3) which may prevent the burner fan from exploiting the entire operating range.

Operating ranges

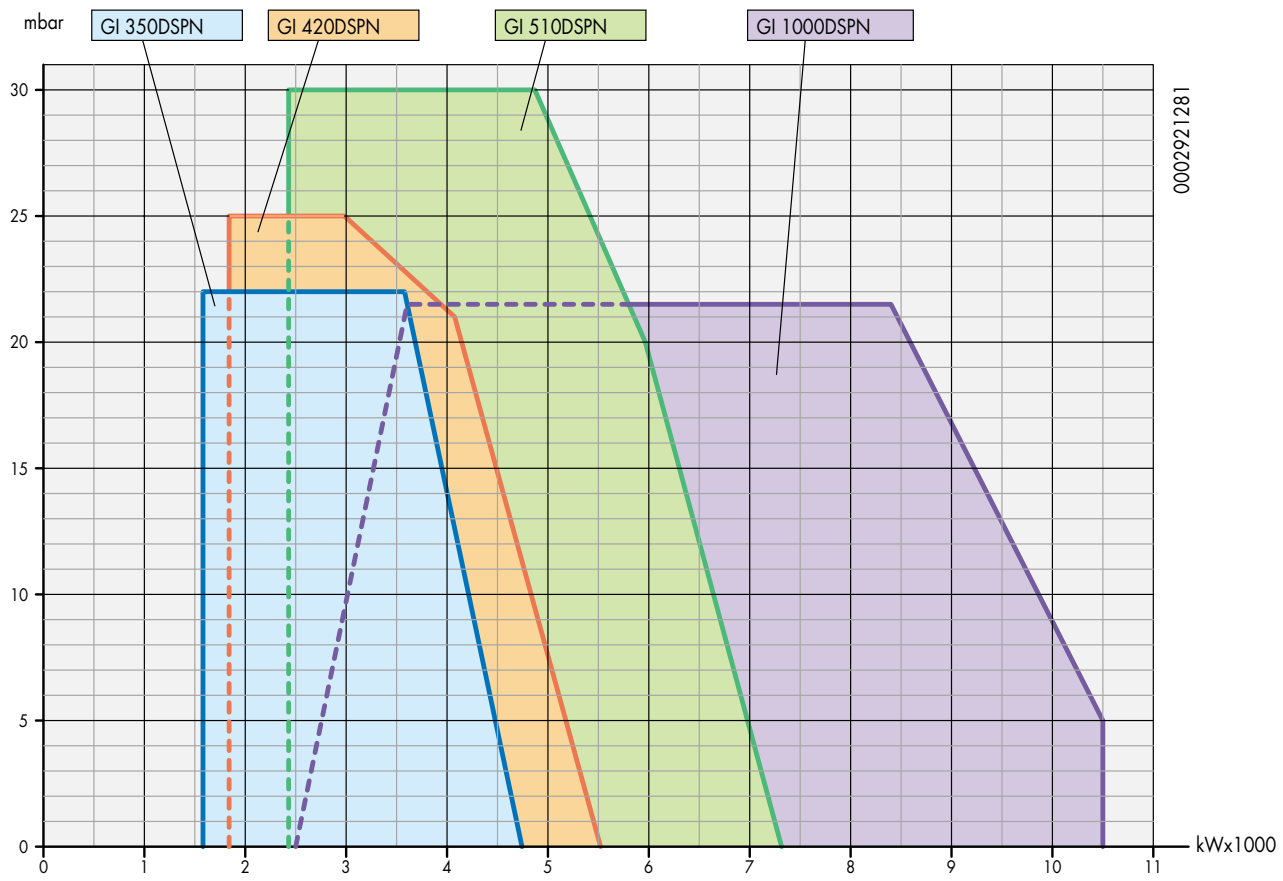

For higher ratings, besides GI burners, the industrial series also include the TS series with separate fan and PYR with separate fan and adjustable flame. Please see the relevant brochure for details.

BT - GI

Medium and heavy oil burners

Technical data

One-stage

Model	Max oil viscosity a 50 °C °E	cSt	Redw. N° 1 sec	Fuel consumption min. kg/h	max kg/h	Burner output [a]) min. kW	max kW	Mains supply	Rated power Motor kW	Resist. kW	Package dimension L x P x H mm	Weight with package kg	Notes
BT 9 N	5	37	150	5	9	55	100	1N ~ 50 Hz 230 V	0,37	0,9	700x 380x 480	30	
BT 15 N	5	37	150	5	15	55	167	3 N ~ 50 Hz 400 V	0,37	1,8	1060x 660x 600	44	[2])
BT 22 N	5	37	150	12	22	134	245	3 N ~ 50 Hz 400 V	0,37	2,2	1060x 660x 600	45	[2])
BT 35 N	7	53	216	20	35	223	390	3 N ~ 50 Hz 400 V	0,37	3,2	1060x 660x 600	50	[2])
BT 60 N	7	53	216	30	60	335	669	3 N ~ 50 Hz 400 V	0,75	6	1510x 750x 720	100	[2])

Two-stage

Model	Max oil viscosity a 50 °C °E	cSt	Redw. N° 1 sec	Fuel consumption min. kg/h	max kg/h	Burner output [a]) min. kW	max kW	Mains supply	Rated power Motor kW	Resist. kW	Package dimension L x P x H mm	Weight with package kg	Notes
BT 40 DSN 4T	7	53	216	20	40	223	446	3N ~ 50 Hz 400 V	0,55	3,2	1060x 660x 600	80	[1])
BT 40 DSN 4T EFD	15	120	470	20	40	223	446	3N ~ 50 Hz 400 V	0,55	3,2	1060x 660x 600	80	[1])
BT 40 DSN 4T + kit	20	155	610	20	40	223	446	3N ~ 50 Hz 400 V	0,55	3,2	1060x 660x 600	80	[1])
BT 50 DSN 4T	7	53	216	28	50	312	558	3N ~ 50 Hz 400 V	1,1	6	1510x 750x 720	110	[1])
BT 50 DSN 4T EFD	15	120	470	28	50	312	558	3N ~ 50 Hz 400 V	1,1	6	1510x 750x 720	110	[1])
BT 50 DSN 4T + kit	20	155	510	28	50	312	558	3N ~ 50 Hz 400 V	1,1	6	1510x 750x 720	110	[1])
BT 75 DSN 4T	7	53	216	40	75	446	837	3N ~ 50 Hz 400 V	1,1	6	1510x 750x 720	117	[1])
BT 75 DSN 4T EFD	15	120	470	40	75	446	837	3N ~ 50 Hz 400 V	1,1	6	1510x 750x 720	117	[1])
BT 75 DSN 4T + kit	20	155	610	40	75	446	837	3N ~ 50 Hz 400 V	1,1	6	1510x 750x 720	117	[1])
BT 75 DSNM-D	50	390	1550	40	75	446	837	3N ~ 50 Hz 400 V	1,1+0,55	10,5	1700x 1000x 710	154	[1])
BT 100 DSN 4T	7	53	216	50	100	558	1116	3N ~ 50 Hz 400 V	1,5	7,5	1510x 750x 720	120	[1])
BT 100 DSN 4T EFD	15	120	470	50	100	558	1116	3N ~ 50 Hz 400 V	1,5	7,5	1510x 750x 720	120	[1])
BT 100 DSN 4T + kit	20	155	610	50	100	558	1116	3N ~ 50 Hz 400 V	1,5	7,5	1510x 750x 720	120	[1])
BT 100 DSNM-D	50	390	1550	50	100	558	1116	3N ~ 50 Hz 400 V	1,5+0,55	10,5	1700x 1000x 710	150	[1])
BT 120 DSN 4T	7	53	216	60	130	669	1451	3N ~ 50 Hz 400 V	2,2	10,5	1700x 1000x 710	190	[1])
BT 120 DSN 4T EFD	15	120	470	60	130	669	1451	3N ~ 50 Hz 400 V	2,2	10,5	1700x 1000x 710	190	[1])
BT 120 DSN 4T + kit	20	155	610	60	130	669	1451	3N ~ 50 Hz 400 V	2,2	10,5	1700x 1000x 710	190	[1])
BT 120 DSNM-D	50	390	1550	60	130	669	1451	3N ~ 50 Hz 400 V	2,2+1,1	10,5	1700x 1000x 710	230	[1])
BT 180 DSN 4T	7	53	216	65	180	725	2009	3N ~ 50 Hz 400 V	3	15	1700x 1000x 710	240	[1])
BT 180 DSN 4T EFD	15	120	470	65	180	725	2009	3N ~ 50 Hz 400 V	3	15	1700x 1000x 710	240	[1])
BT 180 DSN 4T + kit	20	155	610	65	180	725	2009	3N ~ 50 Hz 400 V	3	15	1700x 1000x 710	240	[1])
BT 180 DSNM-D	50	390	1550	65	180	725	2009	3N ~ 50 Hz 400 V	3+1,1	15	1700x 1000x 710	280	[1])
BT 250 DSN 4T	7	53	216	84	284	937	3170	3N ~ 50 Hz 400 V	7,5	18	1700x 1000x 710	280	[1])
BT 250 DSN 4T EFD	15	120	470	84	284	937	3170	3N ~ 50 Hz 400 V	7,5	18	1700x 1000x 710	280	[1])
BT 250 DSN 4T + kit	20	155	610	84	284	937	3170	3N ~ 50 Hz 400 V	7,5	18	1700x 1000x 710	280	[1])
BT 250 DSNM-D	50	390	1550	84	284	937	3170	3N ~ 50 Hz 400 V	7,5+1,1	18	2030x 1210x 990	320	[1])
BT 300 DSN 4T	7	53	216	110	310	1220	3460	3N ~ 50 Hz 400 V	7,5	25,5	2030x 1210x 990	350	[1])
BT 300 DSN 4T EFD	15	120	470	110	310	1220	3460	3N ~ 50 Hz 400 V	7,5	25,5	2030x 1210x 990	350	[1])
BT 300 DSN 4T + kit	20	155	610	110	310	1220	3460	3N ~ 50 Hz 400 V	7,5	25,5	2030x 1210x 990	350	[1])
BT 300 DSNM-D	50	390	1550	110	310	1220	3460	3N ~ 50 Hz 400 V	7,5+2,2	25,5	2260x 1520x 1200	403	[1])
BT 350 DSN 4T	7	53	216	115	350	1284	3907	3N ~ 50 Hz 400 V	9	28,5	2260x 1520x 1200	420	[1])
BT 350 DSN 4T EFD	15	120	470	115	350	1284	3907	3N ~ 50 Hz 400 V	9	28,5	2260x 1520x 1200	420	[1])
BT 350 DSN 4T + kit	20	155	610	115	350	1284	3907	3N ~ 50 Hz 400 V	9	28,5	2260x 1520x 1200	420	[1])
BT 350 DSNM-D	50	390	1550	115	350	1284	3907	3N ~ 50 Hz 400 V	9+2,2	28,5	2260x 1520x 1200	473	[1])

Technical data

High/low pressure

Model	Max oil viscosity a 50 °C °E	cSt	Redw. N° 1 sec	Fuel consumpt. min. kg/h	max kg/h	Burner output [a]) min. kW	max kW	Mains supply	Rated power Motor kW	Resist. kW	Package dimension L x P x H mm	Weight with package kg	Notes
BT 17 SPN	5	37	150	8	17	89	189	3N ~ 50 Hz 400 V	0,37	1,8	1060x 660x 600	73	[2])
BT 17 SPN EFD	15	120	470	8	17	89	189	3N ~ 50 Hz 400 V	0,37	1,8	1060x 660x 600	73	[1])
BT 35 SPN	7	53	216	17	35	189	390	3N ~ 50 Hz 400 V	0,55	3,2	1060x 660x 600	80	[2])
BT 35 SPN EFD	15	120	470	17	35	189	390	3N ~ 50 Hz 400 V	0,55	3,2	1060x 660x 600	80	[1])

Progressive two-stage/modulating [c])

Model	Max oil viscosity a 50 °C °E	cSt	Redw. N° 1 sec	Fuel consumption min. kg/h	max kg/h	Burner output [a]) min. kW	max kW	Mains supply	Rated power Motor kW	Resist. kW	Package dimension L x P x H mm	Weight with package kg	Notes
BT 75 DSPN	7	53	216	40	75	446	837	3N ~ 50 Hz 400 V	1,1+0,55	6	1700x 1000x 710	147	[1]) - [3])
BT 75 DSPN EFD	15	120	470	40	75	446	837	3N ~ 50 Hz 400 V	1,1+0,55	6	1700x 1000x 710	147	[1]) - [3])
BT 75 DSPN-D	50	390	1550	40	75	446	837	3N ~ 50 Hz 400 V	1,1+0,55	10,5	1700x 1000x 710	159	[1]) - [3])
BT 100 DSPN	7	53	216	50	100	558	1116	3N ~ 50 Hz 400 V	1,5+0,55	7,5	1700x 1000x 710	150	[1]) - [3])
BT 100 DSPN EFD	15	120	470	50	100	558	1116	3N ~ 50 Hz 400 V	1,5+0,55	7,5	1700x 1000x 710	150	[1]) - [3])
BT 100 DSPN-D	50	390	1550	50	100	558	1116	3N ~ 50 Hz 400 V	1,5+0,55	10,5	1700x 1000x 710	162	[1]) - [3])
BT 120 DSPN	7	53	216	60	130	669	1451	3N ~ 50 Hz 400 V	2,2+1,1	10,5	1700x 1000x 710	224	[1]) - [3])
BT 120 DSPN EFD	15	120	470	60	130	669	1451	3N ~ 50 Hz 400 V	2,2+1,1	10,5	1700x 1000x 710	224	[1]) - [3])
BT 120 DSPN-D	50	390	1550	60	130	669	1451	3N ~ 50 Hz 400 V	2,2+1,1	10,5	1700x 1000x 710	236	[1]) - [3])
BT 180 DSPN	7	53	216	65	180	725	2009	3N ~ 50 Hz 400 V	3+1,1	15	1700x 1000x 710	274	[1]) - [3])
BT 180 DSPN EFD	15	120	470	65	180	725	2009	3N ~ 50 Hz 400 V	3+1,1	15	1700x 1000x 710	274	[1]) - [3])
BT 180 DSPN-D	50	390	1550	65	180	725	2009	3N ~ 50 Hz 400 V	3+1,1	15	1700x 1000x 710	286	[1]) - [3])
BT 250 DSPN	7	53	216	84	284	937	3170	3N ~ 50 Hz 400 V	7,5+1,1	18	2030x 1210x 990	314	[1]) - [3])
BT 250 DSPN EFD	15	120	470	84	284	937	3170	3N ~ 50 Hz 400 V	7,5+1,1	18	2030x 1210x 990	314	[1]) - [3])
BT 250 DSPN-D	50	390	1550	84	284	937	3170	3N ~ 50 Hz 400 V	7,5+1,1	18	2030x 1210x 990	326	[1]) - [3])
BT 300 DSPN	7	53	216	110	310	1220	3460	3N ~ 50 Hz 400 V	7,5+2,2	25,5	2260x 1520x 1200	396	[1]) - [3])
BT 300 DSPN EFD	15	120	470	110	310	1220	3460	3N ~ 50 Hz 400 V	7,5+2,2	25,5	2260x 1520x 1200	396	[1]) - [3])
BT 300 DSPN-D	50	390	1550	110	310	1220	3460	3N ~ 50 Hz 400 V	7,5+2,2	25,5	2260x 1520x 1200	409	[1]) - [3])
BT 350 DSPN	7	53	216	115	350	1284	3907	3N ~ 50 Hz 400 V	9+2,2	28,5	2260x 1520x 1200	466	[1]) - [3])
BT 350 DSPN EFD	15	120	470	115	350	1284	3907	3N ~ 50 Hz 400 V	9+2,2	28,5	2260x 1520x 1200	466	[1]) - [3])
BT 350 DSPN-D	50	390	1550	115	350	1284	3907	3N ~ 50 Hz 400 V	9+2,2	28,5	2260x 1520x 1200	479	[1]) - [3])
GI 350 DSPN	15	120	470	142	427	1581	4743	3N ~ 50 Hz 400 V	15+2,2	28,5	2260x 1520x 1200	488	[1]) - [3])
GI 350 DSPN EFD	15	120	470	142	427	1581	4743	3N ~ 50 Hz 400 V	15+2,2	28,5	2260x 1520x 1200	488	[1]) - [3])
GI 350 DSPN-D	50	390	1550	142	427	1581	4743	3N ~ 50 Hz 400 V	15+2,2	28,5	2260x 1520x 1200	488	[1]) - [3])
GI 420 DSPN	15	120	470	166	497	1840	5522	3N ~ 50 Hz 400 V	18,5+3	28,5	2260x 1520x 1200	540	[1]) - [3])
GI 420 DSPN EFD	15	120	470	166	497	1840	5522	3N ~ 50 Hz 400 V	18,5+3	28,5	2260x 1520x 1200	540	[1]) - [3])
GI 420 DSPN-D	50	390	1550	166	497	1840	5522	3N ~ 50 Hz 400 V	18,5+3	28,5	2260x 1520x 1200	540	[1]) - [3])
GI 510 DSPN	15	120	470	219	659	2430	7316	3N ~ 50 Hz 400 V	18,5+3	28,5	2260x 1520x 1200	540	[1]) - [3])
GI 510 DSPN EFD	15	120	470	219	659	2430	7316	3N ~ 50 Hz 400 V	18,5+3	28,5	2260x 1520x 1200	540	[1]) - [3])
GI 510 DSPN-D	50	390	1550	219	659	2430	7316	3N ~ 50 Hz 400 V	18,5+3	28,5	2260x 1520x 1200	540	[1]) - [3])
GI 1000 DSPN	15	120	470	224	941	2500	10500	3N ~ 50 Hz 400 V	22+4	36	2350x 1450x 1600	1040	[1]) - [4])
GI 1000 DSPN EFD	15	120	470	224	941	2500	10500	3N ~ 50 Hz 400 V	22+4	36	2350x 1450x 1600	1040	[1]) - [4])
GI 1000 DSPN-D	50	390	1550	224	941	2500	10500	3N ~ 50 Hz 400 V	22+4	36	2350x 1450x 1600	1040	[1]) - [4])

Notes

GI burners, the industrial series also includes in addition to the models with larger capacities: the TS series with separate fan and the PYR series with separate fan and adjustable flame. Information on these models can be found in the relevant brochure.
The **EFD** model burners have been designed and constructed to use desulfurized fuel oil.
[a]) Net heat value: Fuel oil = 9600 kcal/kg = 11,1 kW/kg.
[b]) The modulating burners are obtained by ordering progressive two-stage burners (DSPN) plus the automatic regulator **RWF40** and **modulation kit**; specific instructions are given on the last page of this catalogue.
[1]) Supplied with automatic air closure device.
[2]) On request, with automatic device for air closing.
[3]) For complete burner supply, add the nozzle at 1÷3 ratio.
[4]) For complete burner supply, add the nozzle at 1÷5 ratio.

BT - GI

Medium and heavy oil burners

Dimensions

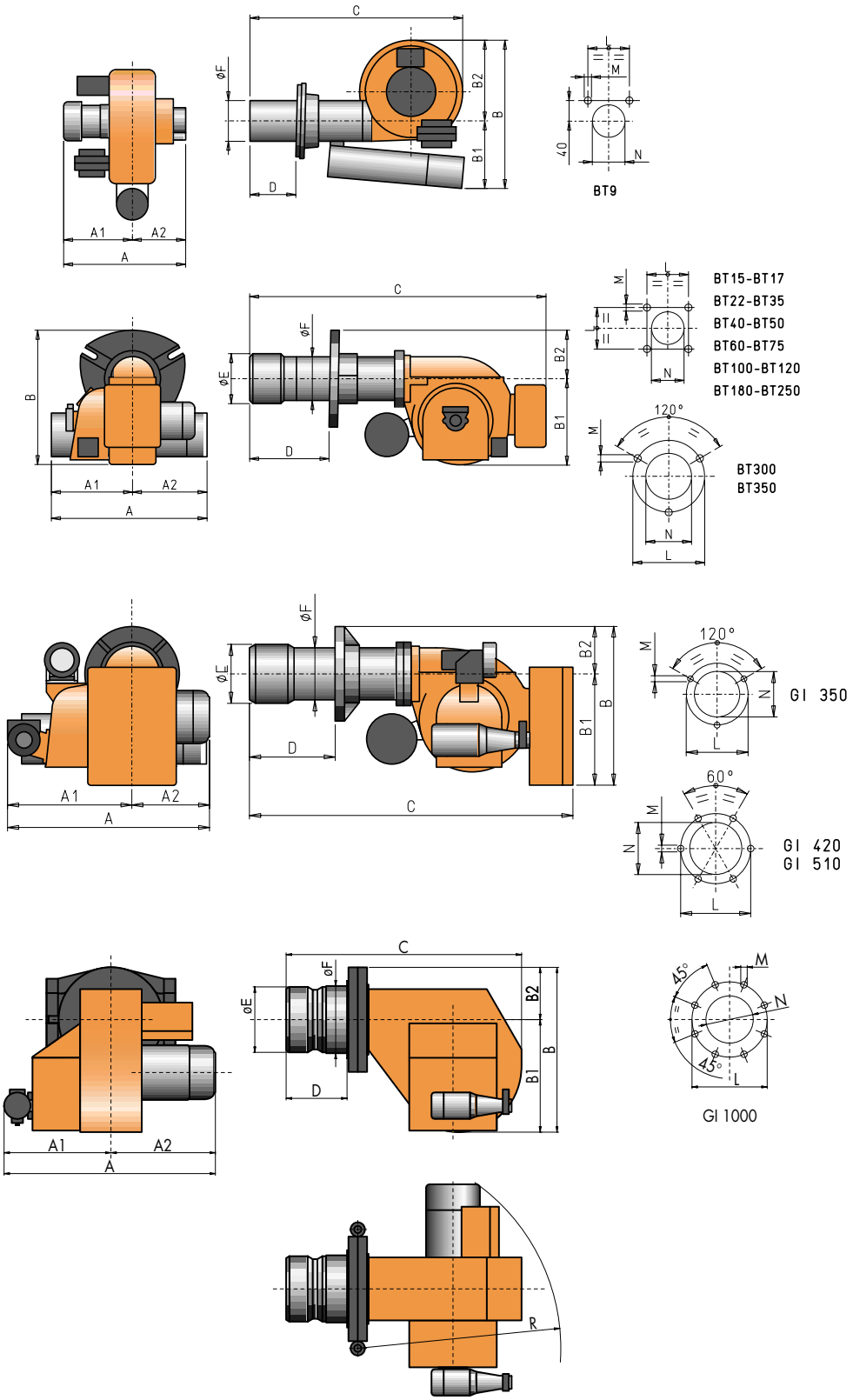

Dimensions

Model	A	A1	A2	B	B1	B2	C	D min	D max	E	F	L	M	N	R
BT 9 N	340	193	147	448	215	233	530	80	—	—	95	140	M8	100	–
BT 15 N	475	215	260	395	260	135	760	90	180	175	115	130	M12	130	–
BT 17 SPN • SPN EFD	520	260	260	440	305	135	965	118	320	134	115	130	M12	145	–
BT 22 N	475	215	260	395	260	135	790	115	210	134	115	130	M12	145	–
BT 35 N	520	260	260	440	305	135	835	125	175	155	135	150	M12	165	–
BT 35 SPN • SPN EFD	520	260	260	440	305	135	985	120	305	155	135	150	M12	165	–
BT 40 DSN 4T • DSN 4T EFD	520	260	260	440	305	135	985	120	305	155	135	150	M12	165	–
BT 50 DSN 4T • DSN 4T EFD	690	340	350	535	400	135	1155	110	375	155	135	150	M12	165	–
BT 60 N	690	340	350	545	400	145	990	160	245	185	160	165	M12	195	–
BT 75 DSN 4T • DSN 4T EFD	690	340	350	545	400	145	1385	170	430	205	160	165	M12	180	–
BT 75 DSNM-D	860	410	450	545	400	145	1385	170	430	205	160	165	M12	180	–
BT 75 DSPN • DSPN EFD • DSPN-D	860	410	450	635	400	235	1385	195	515	205	160	165	M12	180	–
BT 100 DSN 4T • DSN 4T EFD	690	340	350	560	400	160	1320	210	400	230	195	195	M16	240	–
BT 100 DSNM-D	860	410	450	560	400	160	1320	210	400	230	195	195	M16	240	–
BT 100 DSPN • DSPN EFD • DSPN-D	860	410	450	635	400	235	1320	210	400	230	195	195	M16	240	–
BT 120 DSN 4T • DSN 4T EFD	835	385	450	610	450	160	1400	185	450	230	195	195	M16	240	–
BT 120 DSNM-D	910	460	450	610	450	160	1400	185	450	230	195	195	M16	240	–
BT 120 DSPN • DSPN EFD • DSPN-D	910	460	450	685	450	235	1400	185	450	230	195	195	M16	240	–
BT 180 DSN 4T • DSN 4T EFD	915	465	450	650	450	200	1645	200	535	260	220	240	M16	270	–
BT 180 DSNM-D	915	465	450	650	450	200	1645	200	535	260	220	240	M16	270	–
BT 180 DSPN • DSPN EFD • DSPN-D	915	465	450	680	450	230	1645	200	535	260	220	240	M16	270	–
BT 250 DSN 4T • DSN 4T EFD	945	465	480	780	580	200	1665	235	590	260	220	240	M16	270	–
BT 250 DSNM-D	1025	545	480	780	580	200	1665	235	590	260	220	240	M16	270	–
BT 250 DSPN • DSPN EFD • DSPN-D	1025	545	480	780	580	200	1665	235	590	260	220	240	M16	270	–
BT 300 DSN 4T • DSN 4T EFD	1135	645	490	840	580	260	1900	245	605	360	275	490	M20	400	–
BT 300 DSNM-D	1135	645	490	840	580	260	1900	245	605	360	275	490	M20	400	–
BT 300 DSPN • DSPN EFD • DSPN-D	1135	645	490	840	580	260	1900	245	605	360	275	490	M20	400	–
BT 350 DSN 4T • DSN 4T EFD	1205	645	560	960	700	260	1960	350	560	360	275	490	M20	400	–
BT 350 DSNM-D	1220	660	560	960	700	260	1960	350	560	360	275	490	M20	400	–
BT 350 DSPN • DSPN EFD • DSPN-D	1220	660	560	960	700	260	1960	350	560	360	275	490	M20	400	–
GI 350 DSPN • DSPN EFD • DSPN-D	1345	660	685	1010	750	260	1900	275	500	360	275	490	M20	400	–
GI 420 DSPN • DSPN EFD • DSPN-D	1345	660	685	1040	750	290	2030	275	560	400	355	520	M20	420	–
GI 510 DSPN • DSPN EFD • DSPN-D	1345	660	685	1040	750	290	2030	275	560	400	355	520	M20	420	–
GI 1000 DSPN • DSPN EFD • DSPN-D *	1465	800	665	1257	855	402	1710	460	-	480	490	765	M16	495	1360

Notes

*) GI 1000 DSPG available only with hinge.

BT - GI

Medium and heavy oil burners with hinge

Dimensions

0002370281

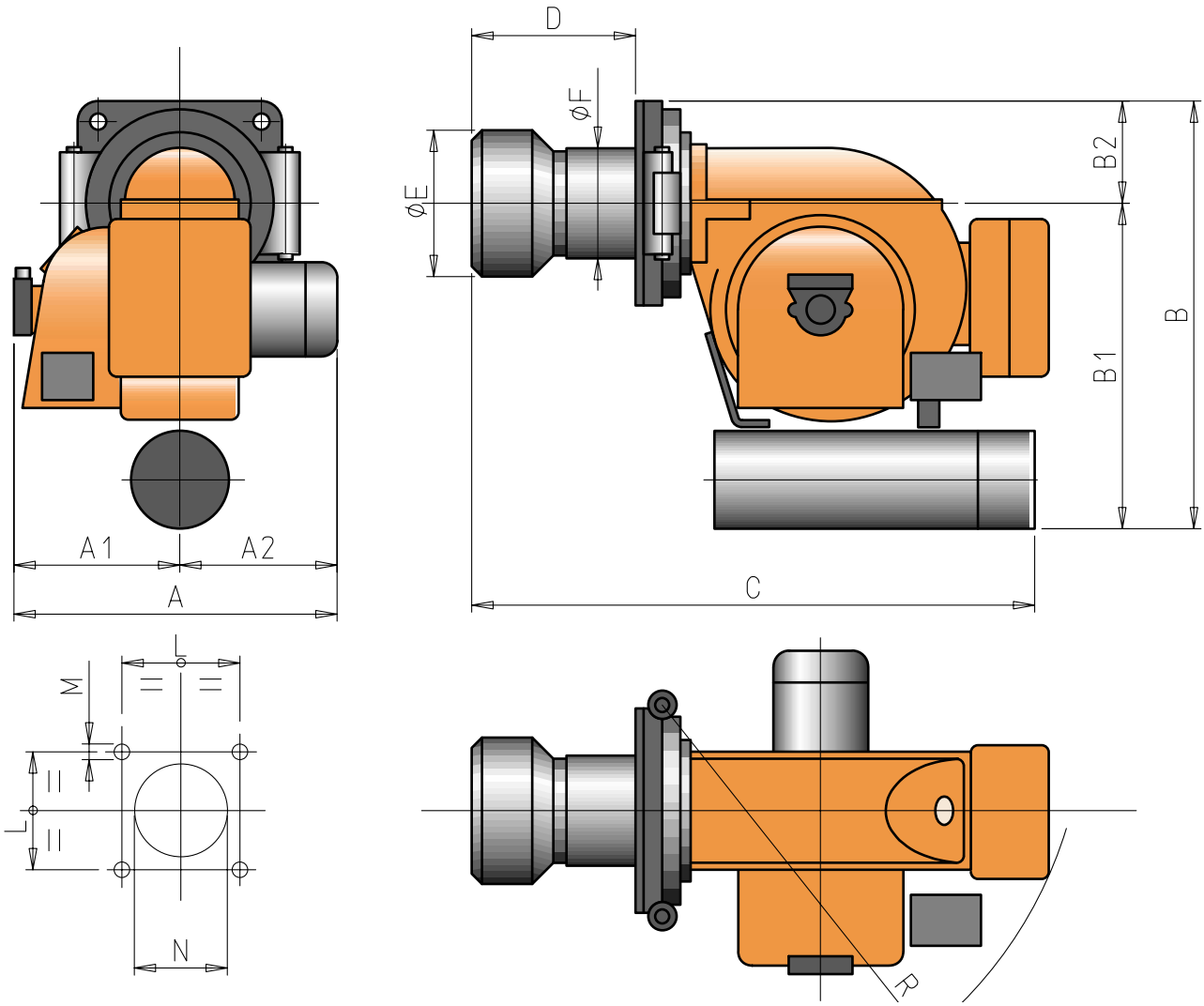

Dimensions

	A	A1	A2	B	B1	B2	C	D	E	F	L	M	N	R
BT 40 DSN 4T	560	300	260	615	465	150	735	145	155	135	230	M 12	170	595
BT 50 DSN 4T	660	340	320	730	580	150	835	145	155	135	230	M 12	170	705
BT 75 DSN 4T	660	340	320	740	580	150	910	220	205	170	230	M 12	220	705
BT 100 DSN 4T	660	340	320	740	580	150	965	265	230	195	240	M 12	240	705
BT 120 DSN 4T	690	320	370	825	665	160	1125	265	230	195	240	M 12	240	865
BT 180 DSN 4T	755	385	370	900	720	180	1210	280	260	225	280	M 16	275	940
BT 250 DSN 4T	945	465	480	1030	850	180	1235	295	260	225	280	M 16	275	940
BT 300 DSN 4T	945	465	490	1170	945	225	1530	420	356	280	360	M 16	370	1135
BT 350 DSN 4T	1085	525	560	1225	1000	225	1530	420	356	280	360	M 16	370	1135
GI 350 DSPN	1345	660	685	1250	1000	250	1500	400	360	280	360	M16	370	1190
GI 420 DSPN	1345	660	685	1250	1000	250	1500	400	390	350	400	M20	400	1190
GI 510 DSPN	1345	660	685	1250	1000	250	1500	400	390	350	400	M20	400	1190

BT - GI

Conversion from progressive two-stage to modulating

Modulating kit table

Temperature 0°C ÷ 160 °C
Temperature 0°C ÷ 500 °C
Temperature 0°C ÷ 1100 °C
Steam pressure 0 ÷ 1 bar
Steam pressure 0 ÷ 10 bar
Steam pressure 0 ÷ 16 bar
Steam pressure 0 ÷ 25 bar
Steam pressure 0 ÷ 40 bar

RWF40 power regulator

By inserting the RWF40 kit and the modulating kit into the two progressive stage burners, these are trasformed into modulating burners, that is, with the capacity to provide thermal power which can be varied continuously in accordance with the specific needs of the boiler. Naturally, the thermal power level varies only within the "minimum" and "maximum" limits applying to the burner.

Selecting modulation kit components

With reference to parameter: temperature (°C) or pressure (bar), select the regulation range corresponding to the operating value of the boiler. When the value falls within two different setting ranges, select the lower of the two.

Example:
If the temperature of the water in the boiler is to be 120°C, choose the modulation kit corresponding to range 0÷160°C. If the pressure of the steam in the boiler is to be 8 bar, select the modulation kit in the regulation range 0÷10 bar.

Baltur S.p.A. - Via Ferrarese, 10 - 44042 Cento (FE) - Italia
Int. Tel. +39.051.684.37.11 - Int. Fax +39.051.90.21.02
www.baltur.com - www.baltur.it - info@baltur.it

Cod. 000110110 - Ediz. 02/01 - Sioca Artigrafiche